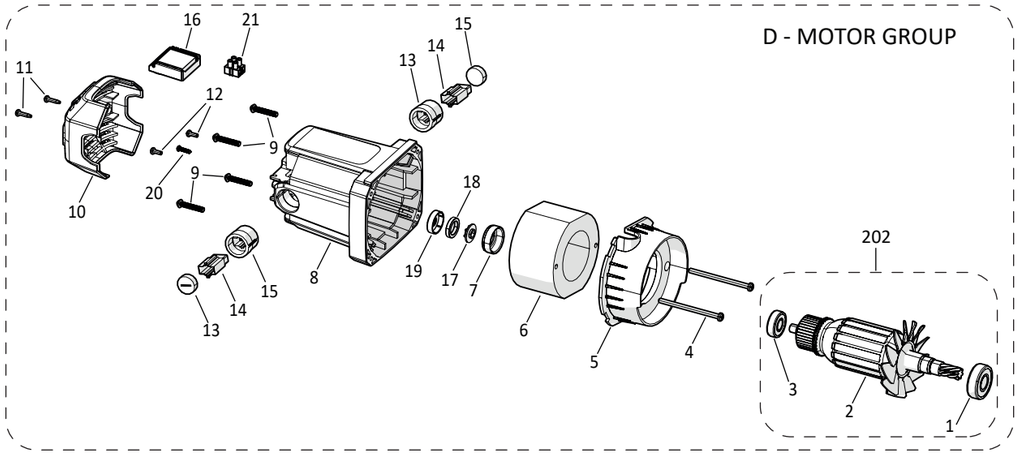

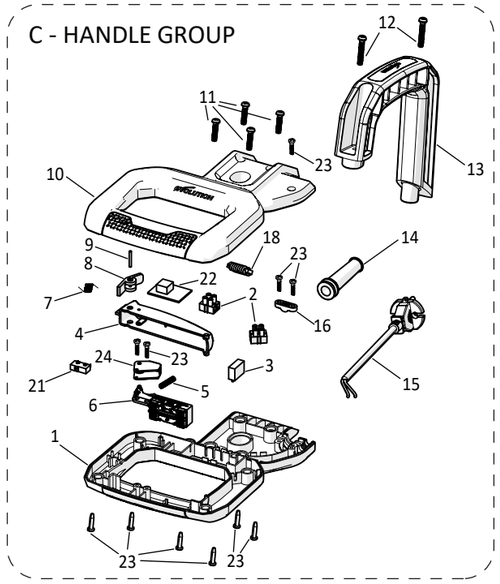

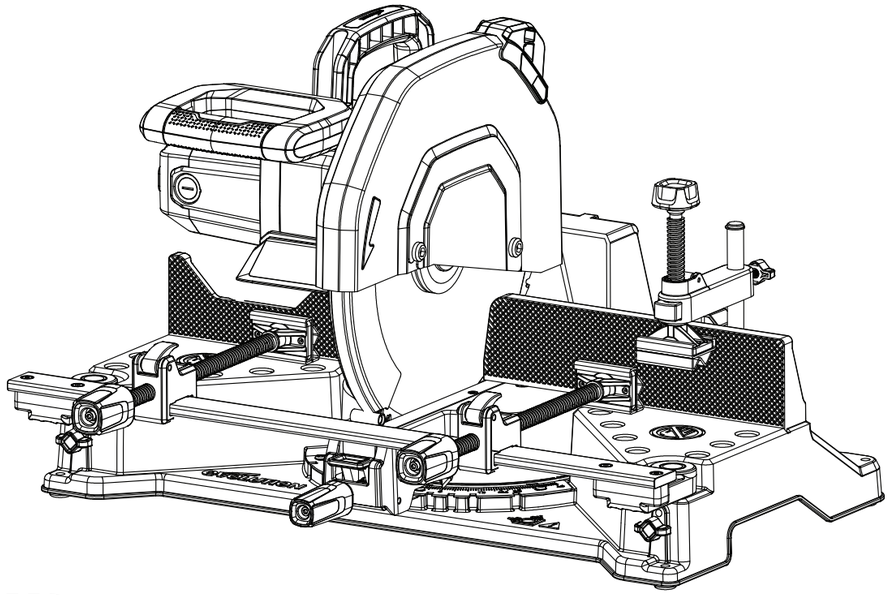

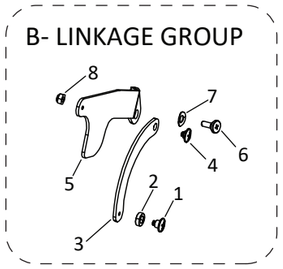

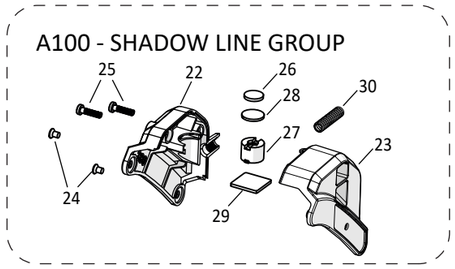

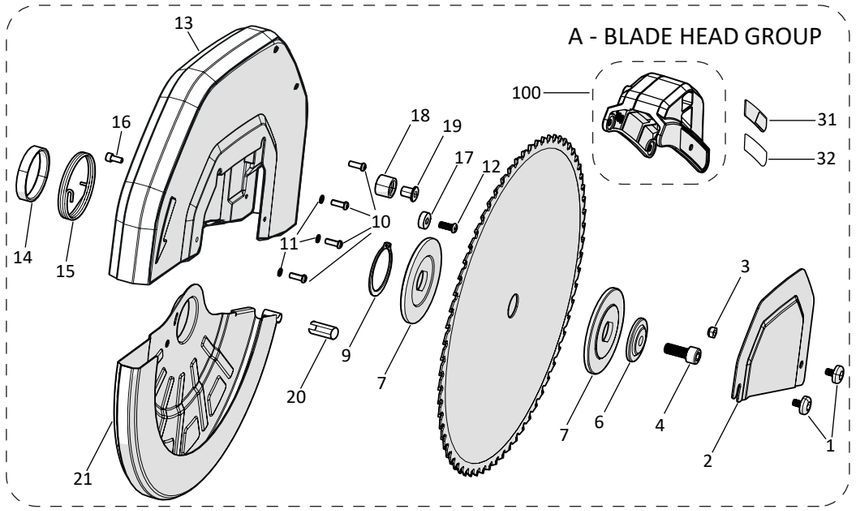

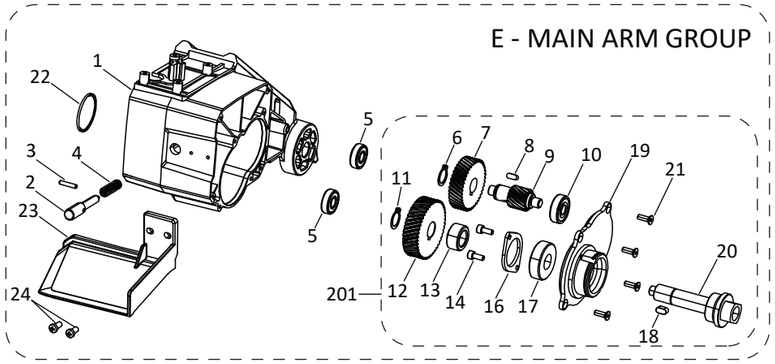

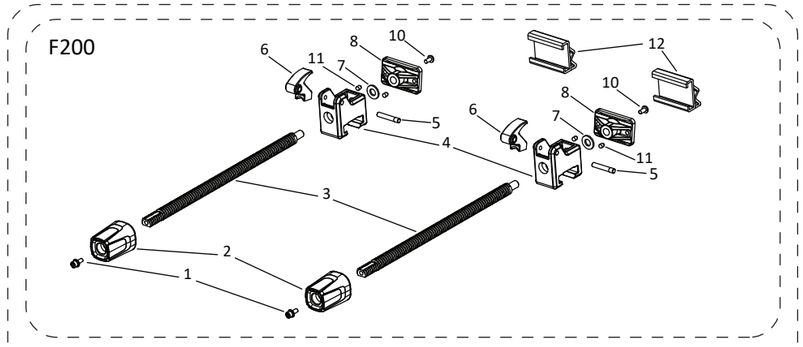

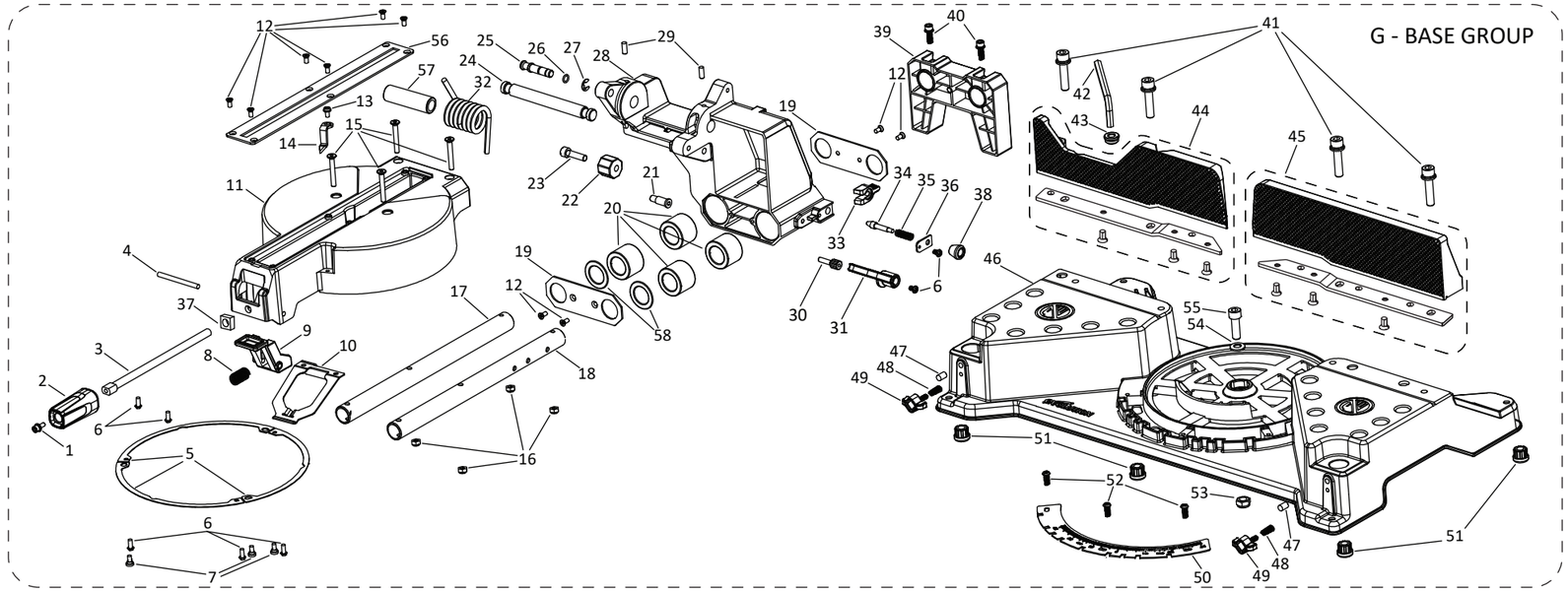

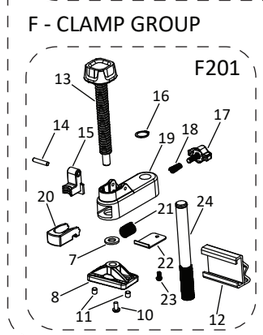

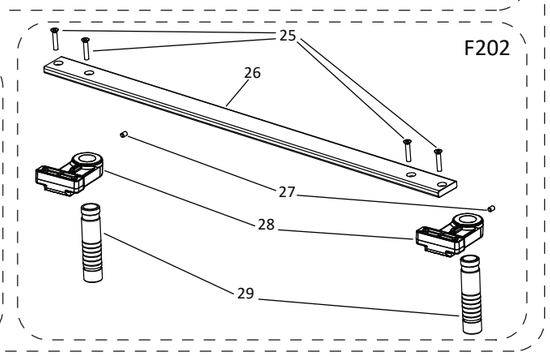

evolutionpowertools.com

Service Parts List	V3	S355MCS-G2 UK 220-240V	ALL PARTS 102-0001A
355mm Mitre Chop Saw			

Item	Description	Part No	Qty
A1	ARBOUR COVER SCREW	083-0101	2
A2	ARBOUR COVER	083-0102	1
A3	LOCKING NUT M6	F-NSH--M6-ST-BO	1
A4	SOCKET CAP SCREW M10X25	F-SHCS-M10-25-ST-BO	1
A6	BLADE WASHER	083-0103	1
A7	FLANGE 89	083-0104	2
A9	CIRCLIP Φ48	F-CCEXT-48-120-ST-BO	1
A10	POZI PAN HEAD SCREW M5X14	F-SPHPZ-M5-14-ST-BO	4
A11	SPRING WASHER Φ5	F-SWA-M5-ST-BO	3
A12	POZI PAN HEAD SCREW M6X12	F-SPHPZ-M6-12-ST-BO	1
A13	BLADE HEAD ASSEMBLY 355	083-0105	1
A14	MOVING GUARD SPRING SPACER 355	083-0106	1
A15	MOVING GUARD SPRING	083-0107	1
A16	SOCKET CAP SCREW M5X12	F-SHCS-M5-12-ST-BO	1
A17	BALL BEARING 606	F-B-606-2Z	1
A18	BUMP STOP	083-0108	1
A19	BUMP STOP FIXING	083-0109	1
A20	SLIDER CAP	083-0110	1
A21	MOVING GUARD ASSEMBLY 355	083-0111	1
A100	LED HOUSING ASSEMBLY 355	083-0311	1
A22	LED HOUSING LH 355	083-0300	1
A23	LED HOUSING RH 355	083-0301	1
A24	M5 SCREW COUNTERSUNK M5X8	F-SCHPZ-M5-8-ST-BO	1
A25	M4 SCREW PAN HEAD M4X14	F-TFPX-M4-14-ST-BO	1
A26	LED SPACER	084-0309	1
A27	LED RETAINER	084-0310	1
A28	LED PCBA	084-0311	1
A29	LED GLASS SHEILD	084-0312	1
A30	CORRUGATED PIPE 280MM	084-0308	1
A31	LED HOUSING PRODUCT PLAQUE S355MCS	102-0164	1
A33	M3 DOUBLE SIDED ADHESIVE TAPE 0.21MM	083-0313	1
B1	LINKAGE SHOULDER SCREW UPPER	083-0115	1
B2	SCREW SPACER	083-0116	1
B3	SMALL LINKAGE	083-0117	1
B4	LINKAGE SHOULDER SCREW MIDDLE	083-0118	1
B5	MAIN LINKAGE	083-0119	1
B6	LINKAGE SHOULDER SCREW LOWER	083-0120	1
B7	WAVE WASHER M10	FWW-M10-ST-BO	1
B8	NUT M6	F-NNIF-M6-ST-BO	1
C1	MAIN HANDLE LOWER	083-0306	1
C2	TERMINAL BLOCK	083-0122	2
C3	CAPACITOR 220-240V	083-0123	1
C4	TRIGGER	084-0304	1
C5	MAIN TRIGGER SPRING	083-0126	1
C6	TRIGGER SWITCH	084-0307	1
C7	TRIGGER LOCK SPRING	083-0128	1
C8	LOCK TRIGGER	083-0129	1
C9	TRIGGER LOCK PIN	083-0130	1
C10	MAIN HANDLE UPPER	083-0307	1
C11	POZI PAN HEAD SCREW M5X20 W/ WASHER	F-SPHPZ-M5-20-ST-BO	4
C12	POZI PAN HEAD SCREW M5X30 W/ WASHER	F-SPHPZ-M5-30-ST-BO	2
C13	CARRY HANDLE	083-0132	1
C14	CABLE SLEEVE SMALL	083-0133	1
C15	CABLE UK 220-240V/3M	084-0111	1
C16	CABLE STRAIN CLAMP	083-0140	1
C18	INDUCTOR	083-0195	1
C21	LED SWITCH	084-0314	1
C22	LED PSU PCBA 230V AC	084-0315	1
C23	POZI PAN HEAD TAPPING SCREW ST4X16	F-TFPX-4-16-ST-BO	11
C24	SWITCH BUTTON	084-0305	1
D1	BALL BEARING 6202 YQ	F-B-6202-2Z	1
D2	ARMATURE 65/220V-240V 2200W	084-0121	1
D3	BALL BEARING 629 YQ	F-B-629-2Z	1
D4	POZI PAN HEAD TAPPING SCREW ST5X80	F-TFPX-5-80-ST-BO	2
D5	AIR BAFFLE 65	084-0125	1
D6	STATOR 65/220V-240V 2200W	084-0127	1
D7	BALL BEARING CAP	053-0270	1
D8	MOTOR HOUSING	083-0150	1

Item	Description	Part No	Qty
D9	POZI PAN HEAD SCREW M5X30 W/ WASHER	F-SPHPZ-M5-30-ST-BO	4
D10	END CAP BLUE	084-0131	1
D11	POZI PAN HEAD TAPPING SCREW ST4X16	F-TFPX-4-16-ST-BO	2
D12	POZI PAN HEAD SCREW M4X10	F-SPHPZ-M4-10-ST-BO	2
D13	BRUSH HOLDER	083-0152	2
D14	CARBON BRUSH 220V-240V	083-0153	2
D15	BRUSH HOLDER COVER	083-0155	2
D16	PCB ASSEMBLY 230V	084-0322	1
D17	MAGNETIC RING HOLDER	053-0267	1
D18	MAGNETIC RING	053-0265	1
D19	MAGNETIC RING COVER	053-0266	1
D20	POZI PAN HEAD SCREW M4-14	F-SPHPZ-M4-14-ST-BO	1
D21	TERMINAL BLOCK 6 HOLES	053-0288	1
D202	ARMATURE 65 ASSEMBLY 110-120V UK/USA	084-0050	1
E1	ARM	083-0160	1
E2	ARBOUR LOCKING PIN	083-0161	1
E3	ROLLER PIN 4X20	F-SDL-4-20--ST-BO	1
E4	LOCKING PIN SPRING	083-0162	1
E5	BALL BEARING 6000 YQ	F-B-6000-2Z	2
E6	CIRCLIP Φ16	F-CCEXT-16-100-ST-BO	1
E7	1ST DRIVE GEAR	083-0163	1
E8	KEY 5X5X12	083-0164	1
E9	GEAR SHAFT	083-0165	1
E10	BALL BEARING 6200 YQ	F-B-6200-2Z	1
E11	CIRCLIP Φ17	F-CCEXT-17-100-ST-BO	1
E12	2ND DRIVE GEAR	083-0166	1
E13	GEAR SPACER	083-0167	1
E14	SOCKET CAP SCREW M5X12	F-SHCS-M5-12-ST-BO	2
E15	SPRING WASHER Φ5	F-SWA-M5-ST-BO	2
E16	BEARING BRACKET	083-0168	1
E17	BALL BEARING 6203 YQ	F-B-6203-2Z	1
E18	KEY 6X6X14	083-0169	1
E19	GEAR BOX COVER	083-0170	1
E20	ARBOUR SHAFT	083-0171	1
E21	PLUM BLOSSOM CAP COUNTERSUNK SCREW M5X15	F-SCHPZ-M5-15-ST-BO	4
E22	RUBBER BEARING RING	083-0196	1
E23	CHIP GUARD	084-0170	1
E24	CROSS HEAD SCREW M5X10	F-SPHPZ-M5-10-ST-BO	2
E201	GEARBOX ASSEMBLY (S355)	084-0055	1
F1	HEX BOLT M5*16 WITH WASHER	F-SFCS-M5-16-ST-BO	2
F2	BANNER LOCK KNOB	102-0101	2
F3	BANNER ROD	102-0102	2
F4	SLIDING BASE	102-0103	2
F5	CLAMP PIN	102-0104	2
F6	BANNER MOVE NUT	102-0105	2
F7	WASHER 20*10*2	F-W-M10-ST-BO	3
F8	WORKPIECE CLAMP	102-0106	3
F10	CROSS HEAD SCREW M5*12 WITH WASHER	F-SPHPZ-M5-12-ST-BO	3
F11	SPRING BEARING INSERT	102-0107	6
F12	V CLAMP STAMPING	102-0109	3
F13	WORK PIECE CLAMP (BLUE)	102-0110	1
F14	VERTICAL CLAMP PIN	102-0111	1
F15	VERTICAL CLAMP NUT	102-0112	1
F16	CIRCLIP EXTERNAL 16MM	F-CCEXT-16-100-ST-BO	1
F17	VERTICAL CLAMP KNOB	102-0113	1
F18	VERTICAL CLAMP KNOB SPRING	102-0114	1
F19	CLAMP ARM	102-0115	1
F20	VERTICAL CLAMP BUTTON	102-0116	1
F21	VERTICAL CLAMP SPRING	102-0117	1
F22	VERTICAL CLAMP SPRING CAP	102-0118	1
F23	CROSS HEAD SCREW M4*10 WITH WASHER	F-SPHPZ-M4-10-ST-BO	1
F24	VETICAL POLE	102-0119	1
F25	HEX BOLT SCREW M6*30	F-SCHS-M6-30-ST-BO	4
F26	FRONT CLAMP BAR	102-0120	1
F27	SET SCREW M6*8	F-SSCFP-M6-8-ST-BO	2
F28	FRONT CLAMP ARM	102-0121	2
F29	FRONT CLAMP POST	102-0122	2

Item	Description	Part No	Qty
G1	HEX BOLT M5*16 WITH WASHER	F-SFCS-M5-16-ST-BO	1
G2	TABLE LOCKING KNOB (BLUE)	102-0123	1
G3	PUSH ROD	102-0124	1
G4	LOCKING PIN	102-0125	1
G5	FRICTION WASHER	102-0126	3
G6	CROSS HEAD SCREW M5*12	F-SPHPZ-M5-12-ST-BO	5
G7	RAIL LOCK SCREW	102-0127	3
G8	LEVER SPRING	102-0128	1
G9	TABLE POSITIONING HANDLE (BLUE)	102-0129	1
G10	TABLE POSITIONING PLATE	102-0130	1
G11	TABLE	102-0131	1
G12	CROSS HEAD SCREW M5*8	F-SCHS-M5-8-ST-BO	10
G13	CROSS HEAD SCREW M5*10 WITH WASHER	F-SPHPZ-M5-10-ST-BO	1
G14	MITRE INDICATOR (BLUE)	102-0132	1
G15	HEX BOLT M6*45	F-SCHS-M6-45-ST-BO	4
G16	NUT M6	F-NNIF-M6-ST-BO	4
G17	LEFT RAIL	102-0133	1
G18	RIGHT RAIL	102-0134	1
G19	BEVEL BRACKET COVER	102-0135	2
G20	RAIL BEARING Φ40*Φ25*30	102-0136	4
G21	LOCK DOWN PIN	102-0137	1
G22	DEEP POSITION CAP	102-0138	1
G23	HEX BOLT SCREW M8*30	F-SHCS-M8-30-ST-BO	1
G24	PIVOT SHAFT	102-0139	1
G25	PIN	102-0140	1
G26	O RING 10*1.9	102-0141	1
G27	E CLIP 8MM	F-ECLIP-8-100-ST-BO	1
G28	NECK- BEVEL BRACKET	102-0142	1
G29	SET SCREW M6*18	F-SSCFP-M6-8-ST-BO	2
G30	RAIL LOCK PIN	102-0143	1
G31	RAIL LOCK HANDLE	102-0144	1
G32	HEAD SPRING	102-0145	1
G33	PIN STOP- FOR PACKAGING	102-0146	1
G34	RAIL POSITIONING PIN	102-0147	1
G35	RAIL PIN SPRING	102-0148	1
G36	RAIL POSITIONING PLATE	102-0149	1
G37	SQUARE NUT M10	F-NS-M10-ST-BO	1
G38	RAIL PIN CAP	102-0150	1
G39	RAIL SUPPORT BRACKET	102-0151	1
G40	HEX BOLT SCREW M6*20 WITH WASHER	F-SFCS-M6-20-ST-BO	2
G41	HEX BOLT SCREW M10*50 WITH WASHER	F-SFCS-M10-50-ST-BO	4
G42	HEXKEY M6 & M10	F-HEXKEY-M6/10-ST-BO	1
G43	GROMMET	102-0152	1
G44	FENCE MCS LH	102-0169	1
G45	FENCE MCS RH	102-0170	1
G46	BASE	102-0155	1
G47	BEARING SCREW M8*12	102-0156	2
G48	WING SPRING	102-0157	2
G49	WING SCREW	102-0158	2
G50	MITRE PLATE	102-0159	1
G51	RUBBER FOOT	102-0160	4
G52	CROSS HEAD SCREW M6*12	F-SPHPZ-M6-12-ST-B0	3
G53	LOCK NUT M10	F-NNIF-M10-ST-BO	1
G54	WASHER 10MM	F-W-M10-ST-BO	1
G55	HEX BOLT SCREW M10*35	F-SHCS-M10-35-ST-BO	1
G56	KERF PLATE	102-0162	1
G57	MAIN TORSION SPRING SPACER	083-0190	1
G58	FELT WASHER	102-0163	2

evolution®
evolutionpowertools.com

Service Parts List	V3	S355MCS-G2 UK 220-240V	ALL PARTS 102-0001A
355mm Mitre Chop Saw			